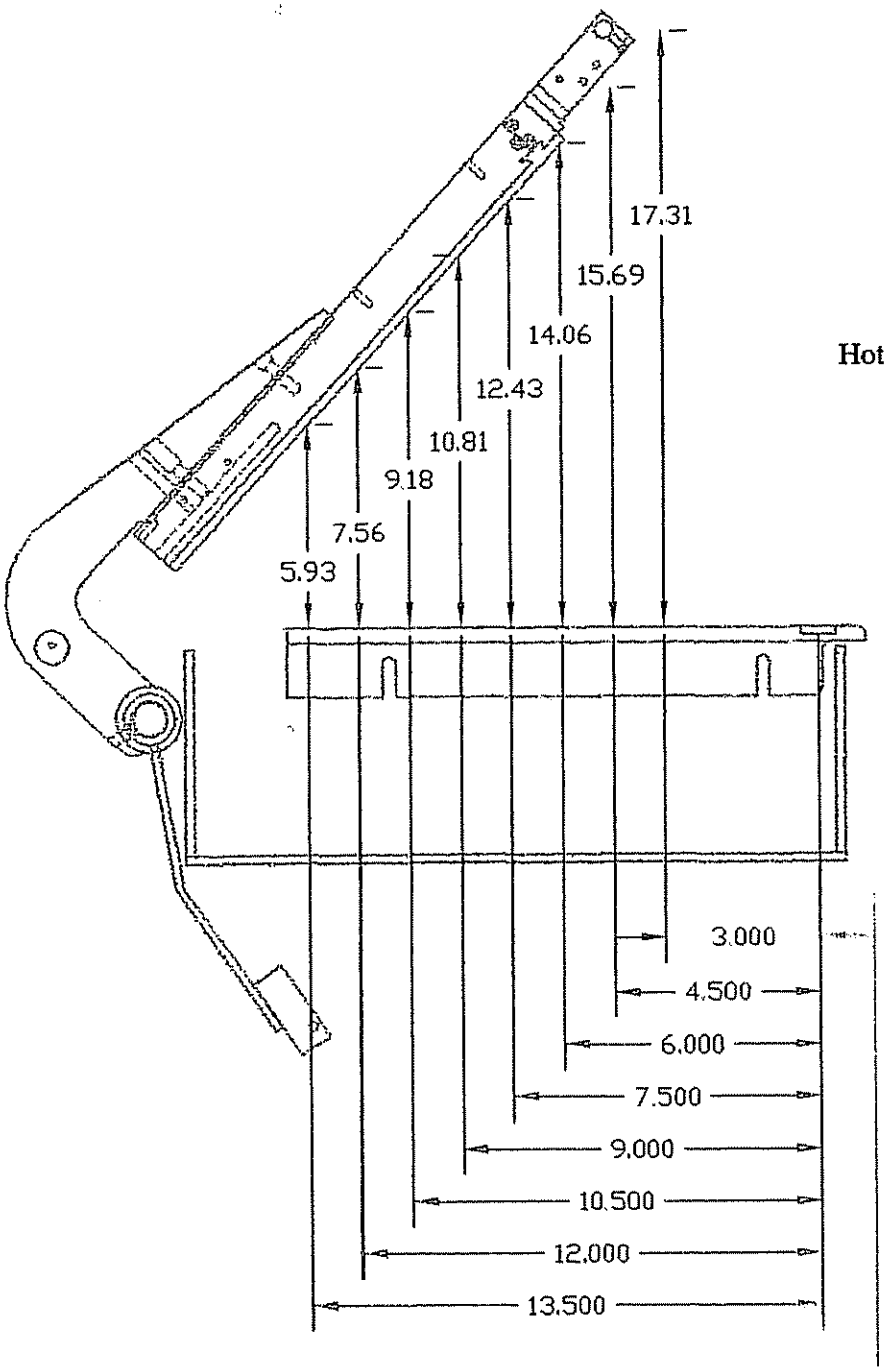

Hot Wire Side Seal - 16"